DO NOT SCALE

TYPICAL DRAWING

NOT TO BE USED AS WORKING DRAWING

PLAN OF MACHINE ROOM

LOCATION - BELOW GROUND FLOOR LEVEL

ACCESS HINGED GATE BY BUILDER FOR SAFETY PURPOSES TO INSIDE OF MACHINE ROOM DOOR.

BUILDER TO SUPPLY AND FIT, "DANGER, RISK OF FALLING" NOTICE TO MACHINE ROOM DOOR.

A LIFTING BEAM OR LIFTING POINT IS TO BE PROVIDED BY THE BUILDER FOR LOWERING LIFT EQUIPMENT TO THE MACHINE ROOM LEVEL. MAXIMUM LOAD IMPOSED = 100 kg.

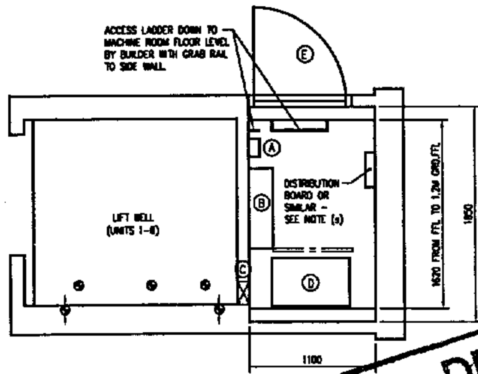

TO COMPLY WITH THE BUILDING REGULATIONS A 1500mm x 1500mm UNOBSTRUCTED LANDING SPACE SHOULD EXIST IN FRONT OF THE LANDING ENTRANCE

SUFFICIENT ACCESS INTO BUILDING AND IN FRONT OF LIFT SHAFT SHOULD BE PROVIDED IN ORDER TO MANOEUVRE 5 METRE LENGTHS OF LIFT EQUIPMENT

NOTES FOR MACHINE ROOM : MINIMUM HEIGHT 2000mm

- A MAIN SWITCH FUSE SUPPLIED AND FITTED BY OTHERS. REFER TO NOTE 'r'. HT TO U/SIDE 1800 FROM FFL.
- B LIFT CONTROL PANEL (75Kg) SECURED TO WALL USING M10 RAWBOLTS BY LIFT ERECTOR. REINFORCEMENT TO BE PROVIDED LOCALLY WHERE WALL CONSTRUCTION IS PLASTERBOARD OR SIMILAR. 700mm MIN CLEARANCE IN FRONT OF PANEL. (IEE, BS & HSE REQUIREMENT).
- C BUILDER TO FORM 1 HOLE THROUGH WALL TO LIFT WELL 300 x 300 FOR OUR HYDRAULICS AND SHAFT WIRING RUNS. BOTTOM OF HOLE POSITIONED 800 ABOVE MACHINE ROOM FFL. HOLE TO BE TRIMMED WITH MATERIAL THAT WILL NOT CHAFE LIFT SERVICES.
- D HYDRAULIC PUMP UNIT, REFER TO SPECIFICATION. MAXIMUM LOAD IMPOSED = 215 Kg.
- E ACCESS DOOR TO MACHINE ROOM. (800mm MIN CLEAR ACCESS). DOOR TO OPEN OUTWARDS. (BS REQUIREMENT)
- F ACCESS TO MACHINE ROOM AREA IS TO BE SUFFICIENT TO ACCOMMODATE ITEM D (PUMP).
- G FLOOR AND WALLS OF MACHINE ROOM TO BE TANKED TO A HEIGHT OF 100mm IF ACCESSIBLE SPACE EXISTS BELOW OR IF WALL CONSTRUCTION IS PLASTERBOARD OR SIMILAR, IN ORDER TO PREVENT OIL SEEPAGE.
- H THE MACHINE ROOM SHALL NOT ENCLOSE ANY EQUIPMENT OTHER THAN FOR THE LIFT, OR CONTAIN DUCTS, CABLES OR DEVICES OTHER THAN FOR THE USE OF THE LIFT.
- J 2 WAY COMMUNICATION SYSTEM CONNECTION POINT. FOR DETAILS OF REQUIREMENTS SEE DATA SHEET No.1890005.

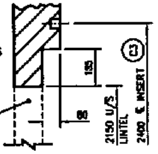

LOADS IMPOSED ON LIFT WELL DUE TO LIFT OPERATION

348 kg ——⊕—— 348 kg

DENOTES PUSH IN/PULL OUT LOADS IMPOSED ON GUIDE RAIL UNISTRUT INSERTS DUE TO LIFT AND LIFT OPERATION ONLY

⊕ DENOTES LOAD IMPOSED ON PIT SLAB

R1- 2385kg EQUIVALENT DEAD LOAD DUE TO CAR WEIGHT + LOAD + RAM

R2- 3870kg EQUIVALENT DEAD LOAD DUE TO CAR BUFFERING OR SAFETY GEAR OPERATION

R1 AND R2 DO NOT OCCUR AT THE SAME TIME

SPECIFICATION

MODEL: SYSTEM 21	MAXI-M8
SPEED: 0.3 m/s	
LOAD: 8 PERSON	630 kg
No. OF STOPS:	2
PUMP UNIT: 75 l/m	MOTOR HP: 8
MAINS SUPPLY: 415v 3ph N+E 50hz	
RUNNING CURRENT/PHASE:	15 AMPS
STARTING CURRENT/PHASE:	45 AMPS
PUMP HEAT DISSIPATION =	1 kW
CONTROL: AUTOMATIC PUSH BUTTON	
CAR SIZE: 1100W 1400D	2200H
DOOR SIZE: 800W	2000H
GUIDES: T61	
MACHINE ROOM MOTOR RATED FUSES TO BS88 PART 2 TYPE T. 30 AMPS A1 FUSE SIZE AVAILABLE FROM RS COMPONENTS	

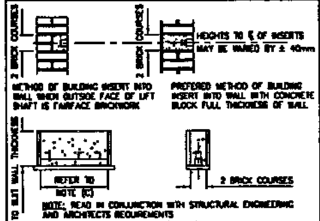

NOTE: READ IN CONJUNCTION WITH STRUCTURAL ENGINEERING AND ARCHITECTS REQUIREMENTS

DETAILS OF UNISTRUT INSERT (P3270) FIXING IN BRICKWORK

TOTAL No OF P3270 SERIES INSERTS REQUIRED	
4 OFF 1770 LONG INSERTS REF ITEMS-C1	BY STANNAH
4 OFF 1400 LONG INSERTS REF ITEMS-C2	BY STANNAH
4 OFF 1600 LONG INSERTS REF ITEMS-C3	BY STANNAH

SCHEDULE OF BUILDERS WORK

TO BE COMPLETED BEFORE LIFT ERECTORS COMMENCE ERECTION OF LIFT ON SITE

(a) Form and finish pit 1200 deep. It is important that the pit is fully and permanently water tight and oil resistant.

(b) [illegible]

(c) [illegible]

(d) [illegible]

(e) [illegible]

(f) [illegible]

(g) [illegible]

(h) [illegible]

(i) Complete electrical work as detailed below.

GENERAL WORK

(j) [illegible]

(k) [illegible]

(l) [illegible]

(m) [illegible]

TO BE COMPLETED BY THE BUILDER IN CONJUNCTION WITH LIFT ERECTORS.

(n) [illegible]

(o) [illegible]

ELECTRICAL REQUIREMENTS BY ELECTRICAL CONTRACTOR

[illegible]

(r) [illegible]

NOTE:

[illegible]

(s) [illegible]

(t) [illegible]

(u) [illegible]

BUILDERS WORK - FINAL STAGE:

(v) [illegible]

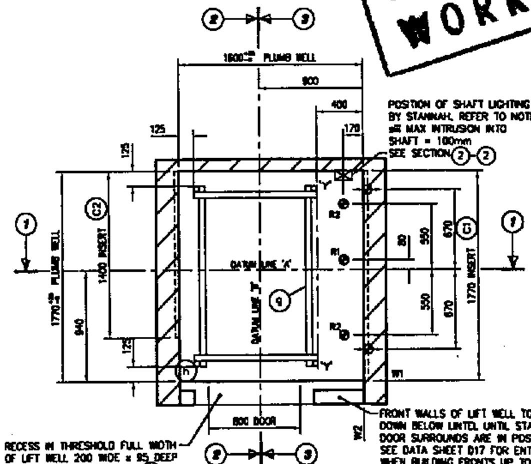

POSITION OF SHAFT LIGHTING BY STANNAH, REFER TO NOTE s MAX INTRUSION INTO SHAFT = 100mm SEE SECTION (2)-(2)

RECESS IN THRESHOLD FULL WIDTH OF LIFT WELL 200 WIDE x 95 DEEP FROM FFL. REFER TO NOTE (q)

FRONT WALLS OF LIFT WELL TO BE LEFT DOWN BELOW LINTEL UNTIL STANNAH LIFTS DOOR SURROUNDS ARE IN POSITION. SEE DATA SHEET D17 FOR ENTRANCE DETAILS WHEN BUILDING FRONTS UP TO DOOR SURROUNDS WALLS TO BE SET FORWARD 80 FROM INSIDE FACE OF LIFT WELL. REFER TO LINTEL RECESS DETAIL ABOVE.

PLAN OF LIFT WELL

(INSERT (C3) NOT SHOWN - SEE SECTION (1)-(1))

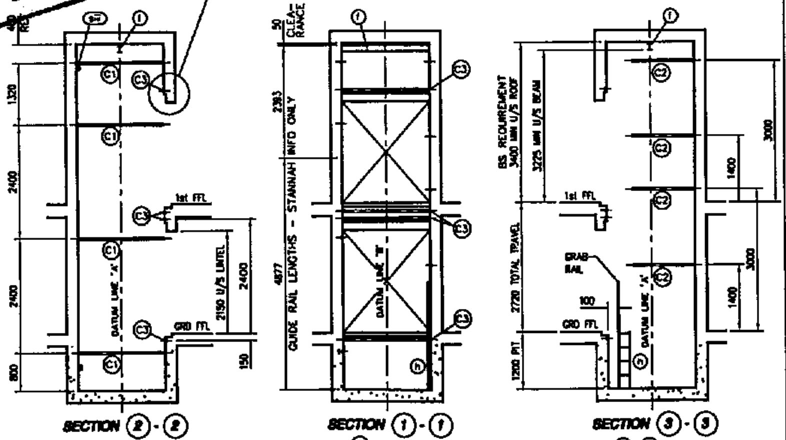

DIMENSIONS FROM FFL TO ℄ OF INSERTS (C3) AS SHOWN AT BOTTOM FLOOR ON SECTION (2)-(2) APPLY TO BOTH FLOORS. DIMENSIONS TO UNDERSIDE OF LINTELS ALSO APPLIES.

REV	DATE	DESCRIPTION	SIG.
A	22.2.99	MACHINE ROOM RE-SIZED FROM FFL TO GRD FFL. TOTAL TRAVEL WAS 2760.	TS

SITE ADDRESS: MURRAY & ALFORD, SHELL LODGES UNITS 1-8, SHERBORNE CLOSE, TUNBRIDGE WELLS

BUILDERS WORK DETAILS AND SCHEDULE WALL MOUNTED LIFT MODEL MAXI-M8

Stannah Lifts

HEAD OFFICE, Anton Mill, Andover, Hampshire, SP10 2NX, England

Tel: 01264 350000 Telefax: 01264 361333

PRINT ISSUED:

DRAWN: AR DATE: 3-2-99

DRAWING NUMBER: LC90024/2A