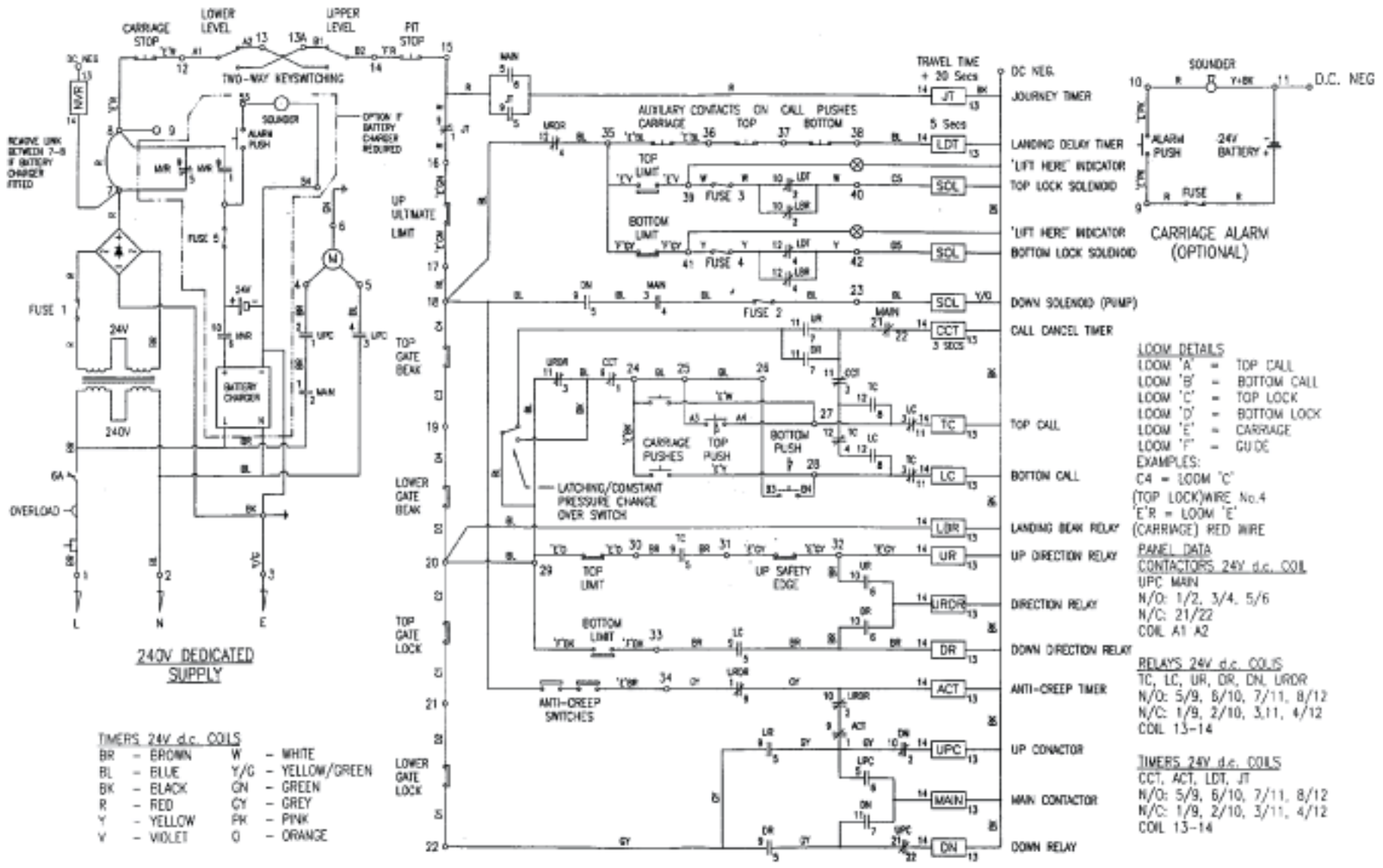

REV	DESCRIPTION	SIG	DATE

WIRING DIAGRAM FOR UTILITY LIFT
WITH SWING MANUAL LANDING DOORS
AND TWO-WAY KEYSWITCHING

DRAWN	DATE	CHECKED	APPD	SCALE
PDS				

DRAWING No. 0230.8019

A3